DESCRIPTIONS

The SN74LVC1G34 Single buffer gate is designed for 1.65V to 5.5V V_{CC} operation.

The SN74LVC1G34 device performs the Boolean function Y=A in positive logic.

The CMOS device has high output drive while maintaining low static power dissipation over a broad V_{CC} operating range.

The SN74LVC1G34 is available in Green SOT23-5 and SC70-5 packages. It operates over an ambient temperature range of -40°C to +125°C.

FEATURES

- **Operating Voltage Range: 1.65V to 5.5V**
- **Low Power Consumption: 0.1μA (TYP)**
- **Operating Temperature Range: -40°C to +125°C**
- **Inputs Accept Voltage to 5.5V**
- **High Output Drive: ±24mA at V_{CC}=3.0V**
- **I_{off} Supports Partial-Power-Down Mode Operation**
- **Micro Size Packages: SOT23-5, SC70-5**

APPLICATIONS

- **AC Receiver**
- **Blu-ray Players and Home Theaters**
- **Desktops or Notebook PCs**
- **Digital Video Cameras (DVC)**
- **Mobile Phones**
- **Personal Navigation Device (GPS)**
- **Portable Media Player**

PACKAGE/ORDERING INFORMATION (1)

PRODUCT	ORDERING NUMBER	TEMPERATURE RANGE	PACKAGE LEAD	PACKAGE MARKING (2)	MSL (3)	PACKAGE OPTION
SN74LVC1G34	SN74LVC1G34DCKR	-40°C ~+125°C	SC70-5 (4)	C95	MSL3	Tape and Reel,3000
	SN74LVC1G34DBVR	-40°C ~+125°C	SOT23-5	C34J	MSL3	Tape and Reel,3000

NOTE:
(1) This information is the most current data available for the designated devices. This data is subject to change without notice and revision of this document.
(2) There may be additional marking, which relates to the lot trace code information (data code and vendor code), the logo or the environmental category on the device.
(3) MSL, The Moisture Sensitivity Level rating according to the JEDEC industry standard classifications.
(4) Equivalent to SOT353.

LOGIC SYMBOL

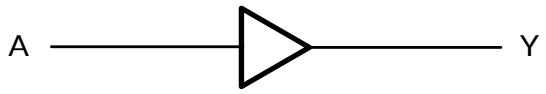

FUNCTION TABLE

INPUT	OUTPUT
A	**Y**
H	H
L	L

Y=A
H=High Voltage Level
L=Low Voltage Level

PIN CONFIGURATION AND FUNCTIONS (TOP VIEW)

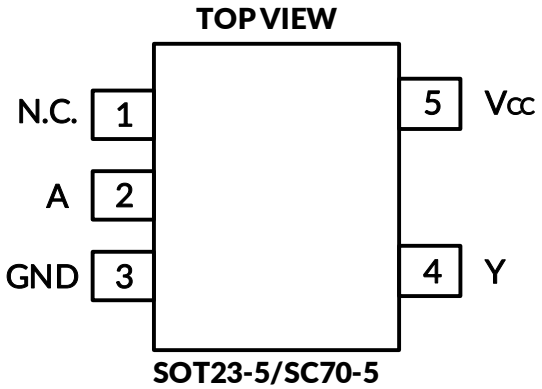

PIN	NAME	I/O	FUNCTION
1	N.C.	-	Not connected
2	A	I	Input
3	GND	P	Ground
4	Y	O	Output
5	V_{CC}	P	Power pin

REVISION HISTORY

Note: Page numbers for previous revisions may different from page numbers in the current version.

VERSION	Change Date	Change Item
Rev A.1	2026/01/12	Initial version completed

Absolute Maximum Ratings

over operating free-air temperature range (unless otherwise noted) [1] [2]

			MIN	MAX	UNIT
V_{CC}	Supply voltage range		-0.5	6.5	V
V_I	Input voltage range [2]		-0.5	6.5	V
Vo	Voltage range applied to any output in the high-impedance or power-off state[2]		-0.5	6.5	V
Vo	Voltage range applied to any output in the high or low state [2][3]		-0.5	V_{CC}+0.5	V
I_{IK}	Input clamp current	V_I<0		-50	mA
I_{OK}	Output clamp current	V_O<0		-50	mA
I_O	Continuous output current			±50	mA
	Continuous current through V_{CC} or GND			±100	mA

Package Thermal Impedance

PARAMETER			MIN	MAX	UNIT
θ_{JA}	Package thermal impedance [4]	SOT23-5		230	°C/W
		SC70-5		380	

Temperature

PARAMETER		MIN	MAX	UNIT
Temperature	Junction temperature, T_J [5]	-65	150	°C
	Storage temperature, T_{stg}	-65	150	

ESD Ratings

The following ESD information is provided for handling of ESD-sensitive devices in an ESD protected area only.

	VALUE	UNIT
Human-Body Model (HBM)	±4000	V
Charged-Device Model (CDM)	±1500	
Machine Model (MM)	±200	

ESD SENSITIVITY CAUTION

ESD damage can range from subtle performance degradation to complete device failure. Precision integrated circuits may be more susceptible to damage because very small parametric changes could cause the device not to meet its published specifications.

NOTE:

(1) Stresses beyond those listed under Absolute Maximum Ratings may cause permanent damage to the device. These are stress ratings only, and functional operation of the device at these or any other conditions beyond those indicated under Recommended Operating Conditions is not implied. Exposure to absolute-maximum-rated conditions for extended periods may affect device reliability.

(2) The input and output negative-voltage ratings may be exceeded if the input and output current ratings are observed.

(3) The value of V_{CC} is provided in the Recommended Operating Conditions table.

(4) The package thermal impedance is calculated in accordance with JESD-51.

(5) The maximum power dissipation is a function of $T_{J(MAX)}$, $R_{\theta JA}$, and T_A. The maximum allowable power dissipation at any ambient temperature is $P_D = (T_{J(MAX)} - T_A) / R_{\theta JA}$. All numbers apply for packages soldered directly onto a PCB.

ELECTRICAL CHARACTERISTICS

over recommended operating free-air temperature range (TYP values are at T_A = +25°C, Full=-40°C to 125°C, unless otherwise noted.) (1)

Recommended Operating Conditions

PARAMETER	SYMBOL	TEST CONDITIONS	MIN	MAX	UNIT
Supply Voltage	V_{CC}	Operating	1.65	5.5	V
		Data retention only	1.5		
High-Level Input Voltage	V_{IH}	V_{CC}=1.65V to 1.95V	0.65 x V_{CC}		V
		V_{CC}=2.3V to 2.7V	1.7		
		V_{CC}=3V to 3.6V	2		
		V_{CC}=4.5V to 5.5V	0.7 x V_{CC}		
Low-Level Input Voltage	V_{IL}	V_{CC}=1.65V to 1.95V		0.35 x V_{CC}	V
		V_{CC}=2.3V to 2.7V		0.7	
		V_{CC}=3V to 3.6V		0.8	
		V_{CC}=4.5V to 5.5V		0.3 x V_{CC}	
Input Voltage	V_I		0	5.5	V
Output Voltage	V_O		0	V_{CC}	V
Input Transition Rise or Fall	Δt/Δv	V_{CC}=1.8V ± 0.15V, 2.5V ± 0.2V		20	ns/V
		V_{CC}=3.3V ± 0.3V		10	
		V_{CC}=5V ± 0.5V		5	
Operating Temperature	T_A		-40	+125	°C

(1) All unused inputs of the device must be held at V_{CC} or GND to ensure proper device operation.

DC Characteristics

PARAMETER		TEST CONDITIONS	V_{CC}	TEMP	MIN(2)	TYP(3)	MAX(2)	UNIT
V_{OH}		I_{OH} = -100 µA	1.65V to 5.5V	Full	V_{CC}-0.1			V
		I_{OH} = -4 mA	1.65V		1.2			
		I_{OH} = -8 mA	2.3V		1.9			
		I_{OH} = -16 mA	3V		2.4			
		I_{OH} = -24 mA			2.3			
		I_{OH} = -32 mA	4.5V		3.8			
V_{OL}		I_{OL} = 100 µA	1.65V to 5.5V	Full			0.1	V
		I_{OL} = 4 mA	1.65V				0.45	
		I_{OL} = 8 mA	2.3V				0.3	
		I_{OL} = 16 mA	3V				0.4	
		I_{OL} = 24 mA					0.55	
		I_{OL} = 32 mA	4.5V				0.55	
I_I	A inputs	V_I=5.5V or GND	0V to 5.5V	+25°C		±0.1		µA
				Full			±5	
	I_{off}	V_I or V_O=5.5V	0	+25°C		±0.1		µA
				Full			±10	
	I_{CC}	V_I=5.5V or GND, I_O=0	1.65V to 5.5V	+25°C		0.1		µA
				Full			10	
	ΔI_{CC}	One input at V_{CC}-0.6V, Other inputs at V_{CC} or GND	3V to 5.5V	Full			500	µA
C_i (Input Capacitance)		V_I = V_{CC} or GND	3.3V	+25°C		4		pF

(1) All unused inputs of the device must be held at V_{CC} or GND to ensure proper device operation.
(2) Limits are 100% production tested at 25°C. Limits over the operating temperature range are ensured through correlations using statistical quality control (SQC) method.
(3) Typical values represent the most likely parametric norm as determined at the time of characterization. Actual typical values may vary over time and will also depend on the application and configuration.

AC Characteristics

PARAMETER	SYMBOL	TEST CONDITIONS		MIN(2)	TYP(3)	MAX(2)	UNIT
Propagation Delay	t_{pd}	V_{CC}=1.8V±0.15V	C_L=30pF, R_L=1kΩ		13.2		ns
		V_{CC}=2.5V±0.2V	C_L=30pF, R_L=500Ω		5.2		
		V_{CC}=3.3V±0.3V	C_L=50pF, R_L=500Ω		4.0		
		V_{CC}=5V±0.5 V	C_L=50pF, R_L=500Ω		3.5		
Power Dissipation Capacitance	C_{pd}	V_{CC}=1.8V	f=10MHz		16		pF
		V_{CC}=2.5V			18		
		V_{CC}=3.3V			18		
		V_{CC}=5V			20		

(1) All unused inputs of the device must be held at V_{CC} or GND to ensure proper device operation.
(2) This parameter is ensured by design and/or characterization and is not tested in production.
(3) Typical values represent the most likely parametric norm as determined at the time of characterization. Actual typical values may vary over time and will also depend on the application and configuration.

PARAMETER MEASUREMENT INFORMATION

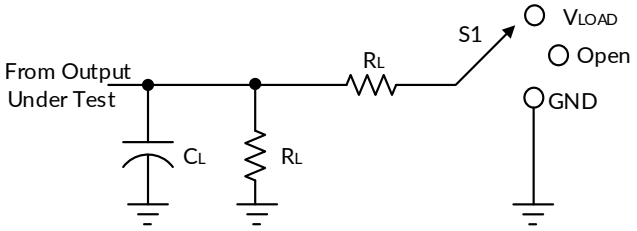

TEST	S1
t_{PLH}/t_{PHL}	Open
t_{PLZ}/t_{PZL}	V_{LOAD}
t_{PHZ}/t_{PZH}	GND

V_{CC}	INPUTS V_I	INPUTS t_r/t_f	V_M	V_{LOAD}	C_L	R_L	V_Δ
1.8V±0.15V	V_{CC}	≤2ns	$V_{CC}/2$	2 x V_{CC}	30pF	1kΩ	0.15V
2.5V±0.2V	V_{CC}	≤2ns	$V_{CC}/2$	2 x V_{CC}	30pF	500Ω	0.15V
3.3V±0.3V	3V	≤2.5ns	1.5V	6V	50pF	500Ω	0.3V
5V±0.5V	V_{CC}	≤2.5ns	$V_{CC}/2$	2 x V_{CC}	50pF	500Ω	0.3V

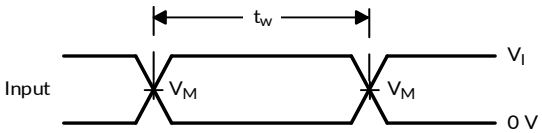

VOLTAGE WAVEFORMS
PULSE DURATION

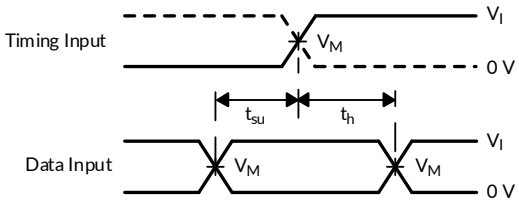

VOLTAGE WAVEFORMS
SETUP AND HOLD TIMES

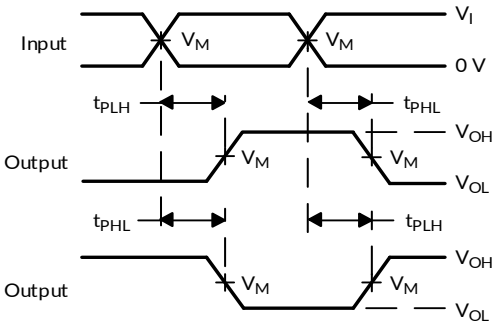

VOLTAGE WAVEFORMS PROPAGATION DELAY
TIMES INVERTION AND NONINVERTING OUTPUTS

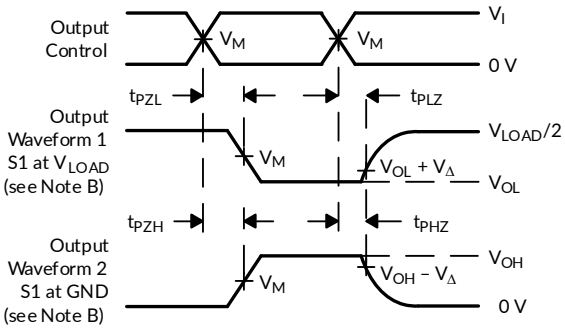

VOLTAGE WAVEFORMS ENABLE AND DISABLE TIMES
LOW-AND HIGH-LEVEL ENABLING

NOTES: A. C_L includes probe and jig capacitance.
B. Waveform 1 is for an output with internal conditions such that the output is low, except when disabled by the output control. Waveform 2 is for an output with internal conditions such that the output is high, except when disabled by the output control.
C. All input pulses are supplied by generators having the following characteristics: PRR ≤ 10 MHz, Z_O = 50 Ω.
D. The outputs are measured one at a time, with one transition per measurement.
E. t_{PLZ} and t_{PHZ} are the same as t_{dis}.
F. t_{PZL} and t_{PZH} are the same as t_{en}.
G. t_{PLH} and t_{PHL} are the same as t_{pd}.
H. All parameters and waveforms are not applicable to all devices.

Figure 1. Load Circuit and Voltage Waveforms

DETAILED DESCRIPTION

Overview

The SN74LVC1G34 device contains one buffer gate device and performs the Boolean function Y = A. This device is fully specified for partial-power-down applications using I_{off}. The I_{off} circuitry disables the outputs, preventing damaging current backflow through the device when it is powered down.

Functional Block Diagram

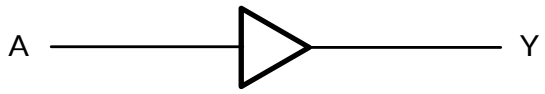

Feature Description

- Wide operating voltage range.
  - Operates from 1.65 V to 5.5 V.
- Allows down voltage translation.
- Inputs accept voltages to 5.5 V.
- I_{off} feature allows voltages on the inputs and outputs when V_{CC} is 0 V.

APPLICATION AND IMPLEMENTATION

Application Information

The SN74LVC1G34 is a high drive CMOS device that can be used as a buffer with a high output drive, such as an LED application. It can produce 24 mA of drive current at 3.0 V making it ideal for driving multiple outputs and good for high speed applications up to 100MHz. The inputs are 5.5 V tolerant allowing it to translate down to V_{CC}.

Design Requirements

This device uses CMOS technology and has balanced output drive. Care should be taken to avoid bus contention because it can drive currents that would exceed maximum limits. The high drive will also create fast edges into light loads so routing and load conditions should be considered to prevent ringing.

Documentation is for reference only;
rely on actual application testing

POWER SUPPLY RECOMMENDATIONS

The power supply pin should have a good bypass capacitor to prevent power disturbance. For devices with a single supply, a 0.1µF capacitor is recommended and if there are multiple V_{CC} terminals then 0.01µF or 0.022µF capacitors are recommended for each power terminal. It is acceptable to parallel multiple bypass caps to reject different frequencies of noise. The 0.1µF and 1µF capacitors are commonly used in parallel. The bypass capacitor should be installed as close to the power terminal as possible.

LAYOUT

Layout Guidelines

When using multiple bit logic devices inputs should not ever float. In many cases, functions or parts of functions of digital logic devices are unused; for example, when only two inputs of a triple-input AND gate are used or only 3 of the 4 buffer gates are used. Such input pins should not be left unconnected because the undefined voltages at the outside connections result in undefined operational states. Specified below are the rules that must be observed under all circumstances. All unused inputs of digital logic devices must be connected to a high or low bias to prevent them from floating. The logic level that should be applied to any particular unused input depends on the function of the device. Generally, they will be tied to GND or V_{CC} whichever make more sense or is more convenient.

Layout Example

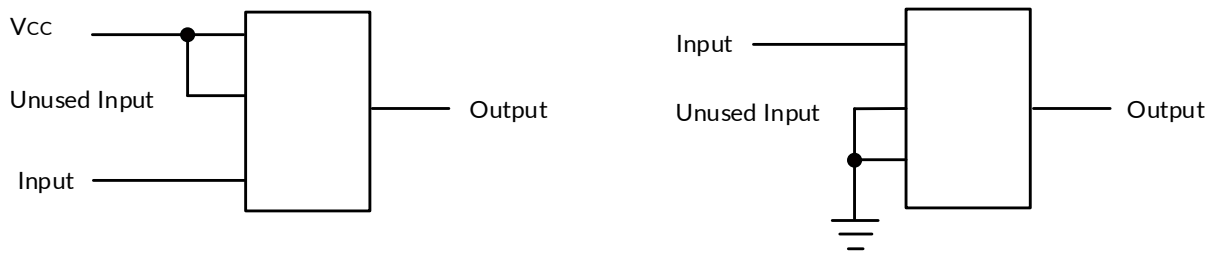

Figure 2. Layout Diagram

TAPE AND REEL INFORMATION

REEL DIMENSIONS

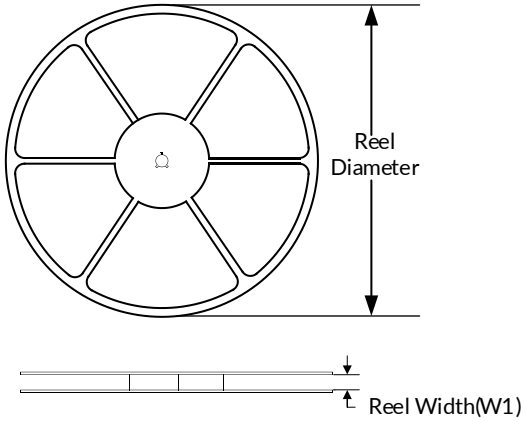

TAPE DIMENSION

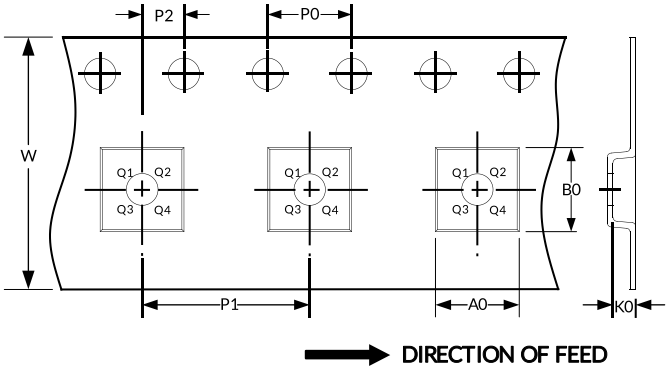

NOTE: The picture is only for reference. Please make the object as the standard.

KEY PARAMETER LIST OF TAPE AND REEL

Package Type	Reel Diameter	Reel Width (mm)	A0 (mm)	B0 (mm)	K0 (mm)	P0 (mm)	P1 (mm)	P2 (mm)	W (mm)	Pin1 Quadrant
SC70-5	7”	9.5	2.25	2.55	1.20	4.0	4.0	2.0	8.0	Q3
SOT23-5	7”	9.5	3.20	3.20	1.40	4.0	4.0	2.0	8.0	Q3

NOTE:
1. All dimensions are nominal.
2. Plastic or metal protrusions of 0.15mm maximum per side are not included.

PACKAGE OUTLINE DIMENSIONS

NOTE:

1. Plastic or metal protrusions of 0.15mm maximum per side are not included.
2. BSC (Basic Spacing between Centers), "Basic" spacing is nominal.
3. This drawing is subject to change without notice.

SOT23-5 (3)

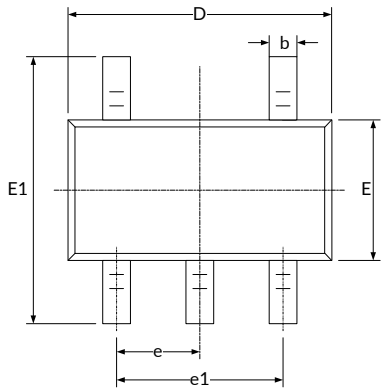

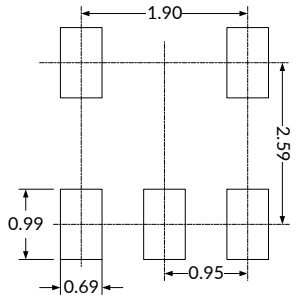

RECOMMENDED LAND PATTERN (Unit: mm)

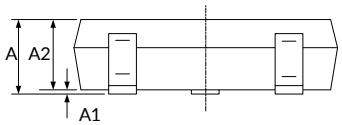

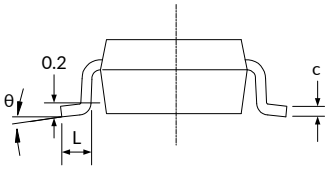

Symbol	Dimensions In Millimeters		Dimensions In Inches	
	Min	Max	Min	Max
A (1)	1.050	1.250	0.041	0.049
A1	0.000	0.100	0.000	0.004
A2	1.050	1.150	0.041	0.045
b	0.300	0.500	0.012	0.020
c	0.100	0.200	0.004	0.008
D (1)	2.820	3.020	0.111	0.119
E (1)	1.500	1.700	0.059	0.067
E1	2.650	2.950	0.104	0.116
e	0.950(BSC) (2)		0.037(BSC) (2)	
e1	1.800	2.000	0.071	0.079
L	0.300	0.600	0.012	0.024
θ	0°	8°	0°	8°

NOTE:
1. Plastic or metal protrusions of 0.15mm maximum per side are not included.
2. BSC (Basic Spacing between Centers), "Basic" spacing is nominal.
3. This drawing is subject to change without notice.

SC70-5 (3)

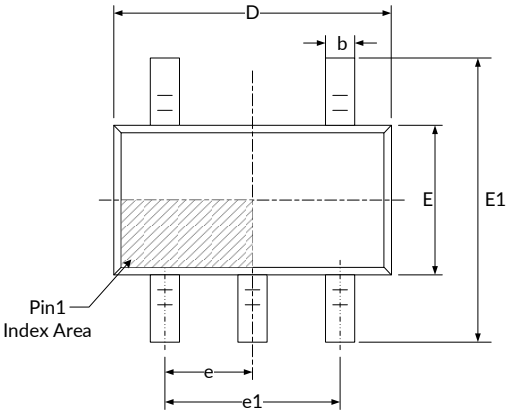

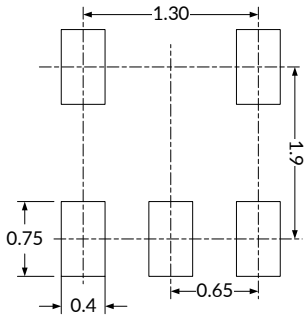

RECOMMENDED LAND PATTERN (Unit: mm)

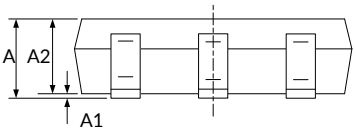

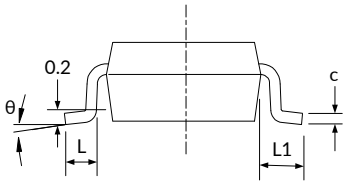

Symbol	Dimensions In Millimeters		Dimensions In Inches	
	Min	Max	Min	Max
A (1)	0.900	1.100	0.035	0.043
A1	0.000	0.100	0.000	0.004
A2	0.900	1.000	0.035	0.039
b	0.150	0.350	0.006	0.014
c	0.080	0.150	0.003	0.006
D (1)	2.000	2.200	0.079	0.087
E (1)	1.150	1.350	0.045	0.053
E1	2.150	2.450	0.085	0.096
e	0.650(BSC) (2)		0.026(BSC) (2)	
e1	1.300(BSC) (2)		0.051(BSC) (2)	
L	0.260	0.460	0.010	0.018
L1	0.525		0.021	
θ	0°	8°	0°	8°

Documentation is for reference only;
rely on actual application testing